PRODUCT SPECIFICATION

SHO182DP- Easy Fit Wall Fixing Plate for Douche valve Brushed Brass



BAR CODE: 5055681479954

COLOUR: BRUSHED BRASS

WEIGHT:

NET 0.25 **kg**

GROSS 0.275 **kg**

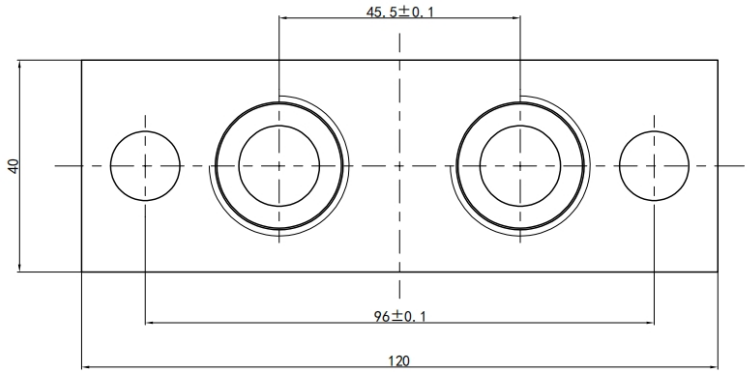

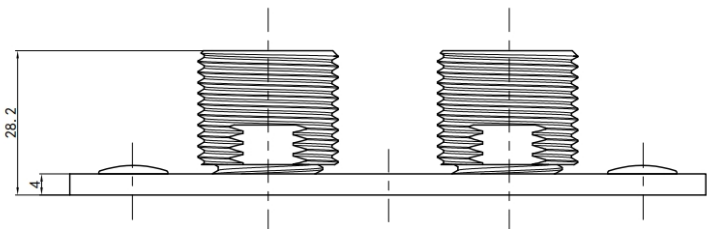

Blister Packing SIZE:150X127mm