Quantum Spacesaver 1700 x 750(400)



Right-hand model illustrated



Technical Information

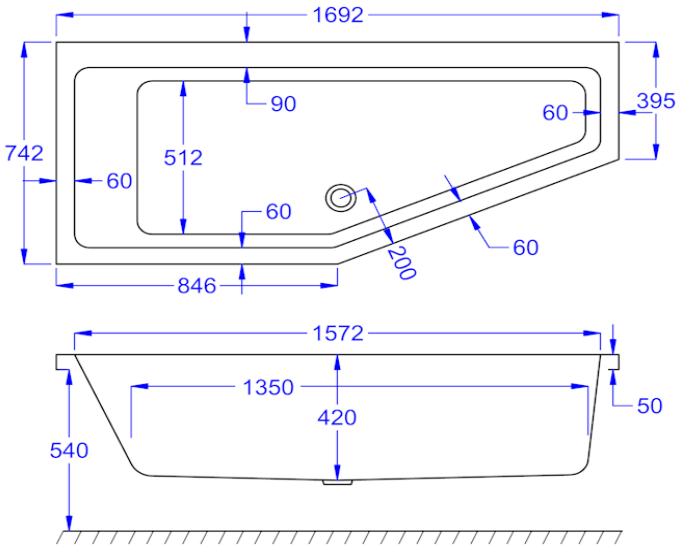

Bath Codes

Quantum Spacesaver LH Standard	02179
Quantum Spacesaver LH Carronite	02177
Quantum Spacesaver RH Standard	02180
Quantum Spacesaver RH Carronite	02178

Panel Codes

Quantum Spacesaver Front Panel Standard	02328
Quantum Spacesaver Front Panel Carronite	02329
Spacesaver End 700x515 Standard Panel	02330
Spacesaver End 700x515 Carronite Panel	02331

Screen Code

QSS-2 Screen	02347
CFS-1 Screen	02344

Water Capacity

211 litres

Installation Kit

Standard - AK-10
Carronite - AK-10-C

Whirlpool Compatibility

Clenda Systems 1 & 4

Carron Bathrooms Limited
North Carron Works
Stenhouse Road
Falkirk, FK2 8UW

Email : info@carronbathrooms.com
Web : www.carronbathrooms.com
Tel : +44 (0)1324 638 407

carron
THE NAME FOR BATHS