Quantum SE

1700 x 700

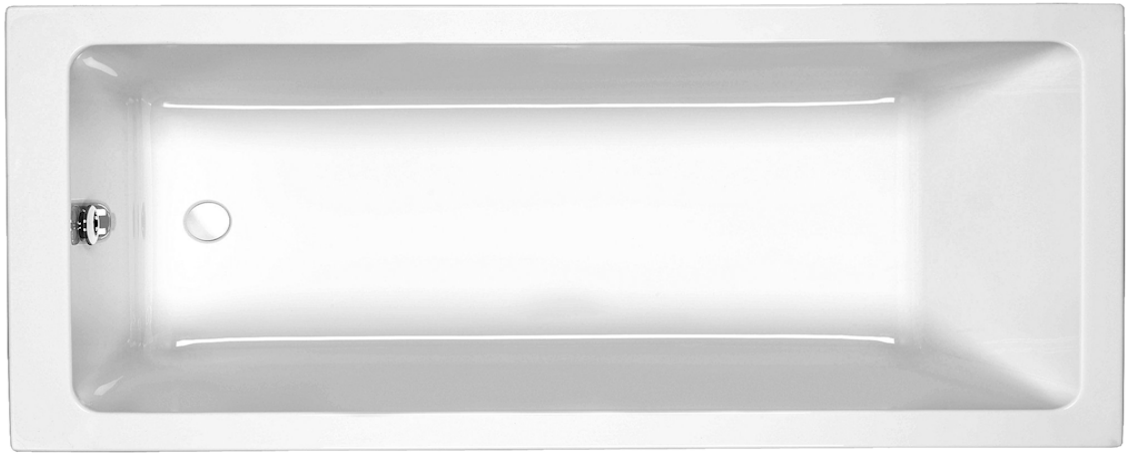





Bath Codes

Quantum SE 1700x700 Standard	02151
Quantum SE 1700x700 Carronite	02152

Screen Codes

CFS1 Curved Profile	02344
CFS1 Square Profile	02346

Panel Codes

L-Shape 1700x700x515 Panel	02299
Front 1700x515 Standard Panel	02320
Front 1700x515 Carronite Panel	02321
End 700x515 Standard Panel	02285
End 700x515 Carronite Panel	02271

Technical Information

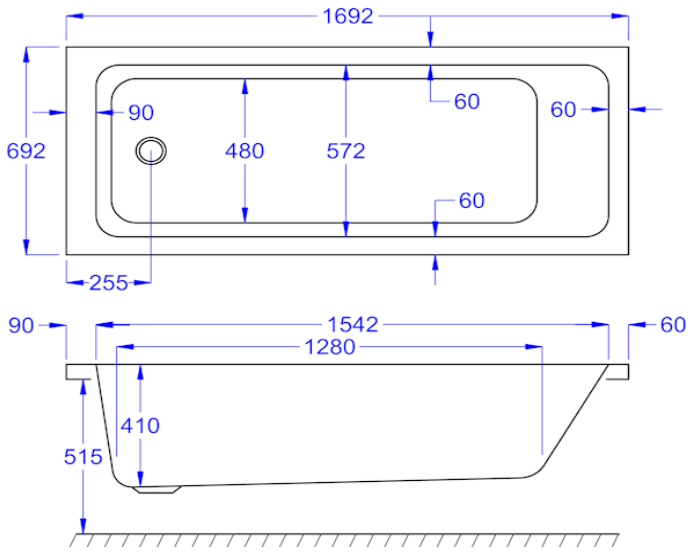

Water Capacity

228 litres

Installation Kit

Standard - AK-01

Carronite - AK-01-C

Whirlpool Compatibility

Clenda System 1 & 4

Carron Bathrooms Limited

North Carron Works
Stenhouse Road
Falkirk, FK2 8UW

Email : info@carronbathrooms.com
Web : www.carronbathrooms.com
Tel : +44 (0)1324 638 407

carron
THE NAME FOR BATHS