Oriole

1200 x 1200



Technical Information

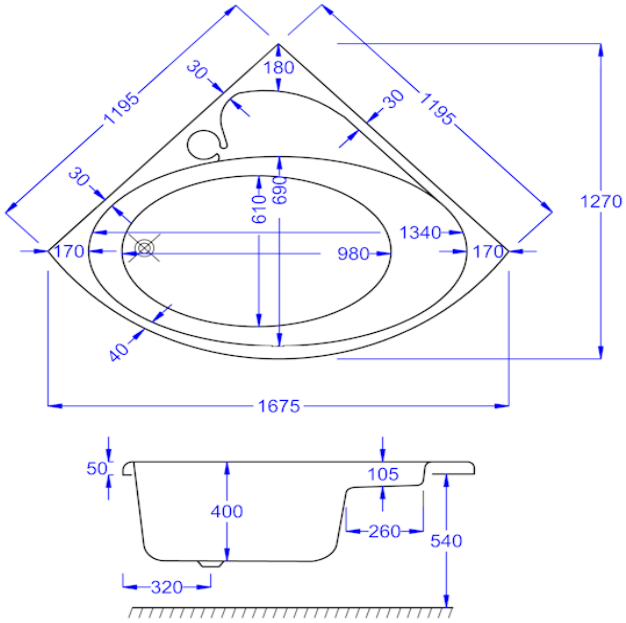

Water Capacity

190 litres

Installation Kit

Standard - AK-09-C

Carronite - AK-09-C

Whirlpool Compatibility

N/A

Bath Codes		Panel Codes	
Oriole Standard	02242	Affinity 1200 Standard Panel	02260
Oriole Carronite	02243	Affinity 1200 Carronite Panel	02261

Carron Bathrooms Limited
North Carron Works
Stenhouse Road
Falkirk, FK2 8UW

Email : info@carronbathrooms.com
Web : www.carronbathrooms.com

carron
THE NAME FOR BATHS