Linea

1900 x 900

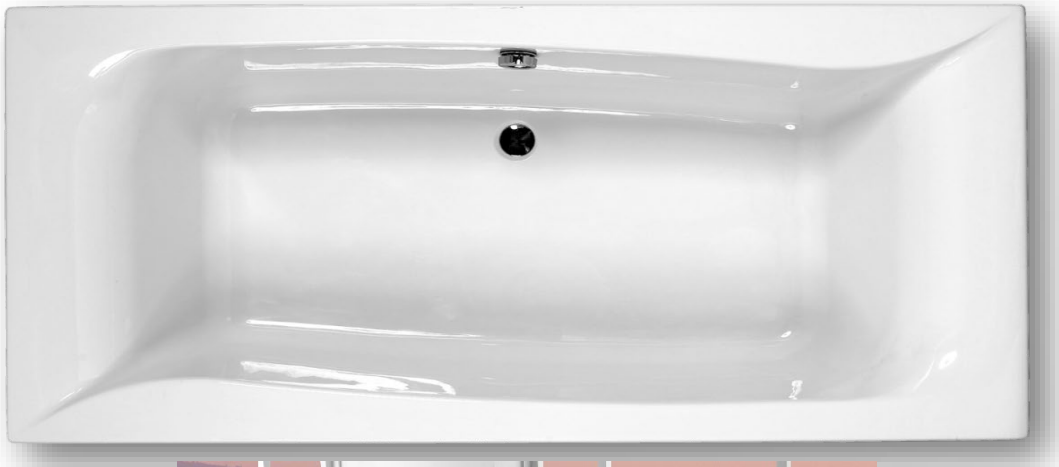



Technical Information

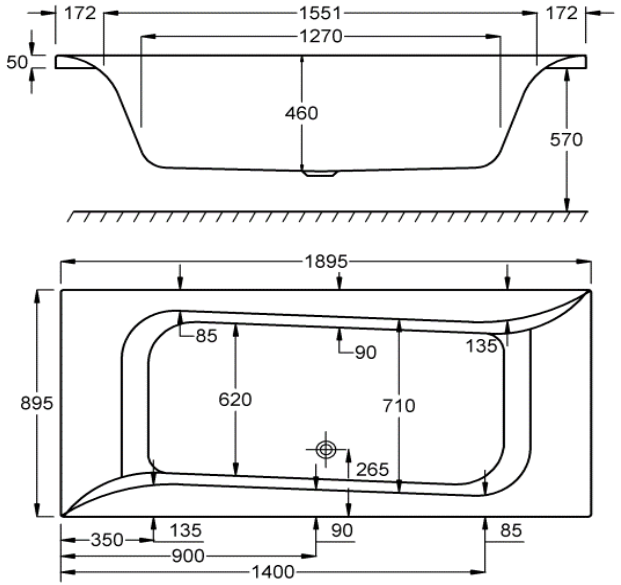

Bath Codes

Linea 1900x900 Standard	02120
Linea 1900x900 Carronite	02121

Panel Codes

Front 1900x570 Standard Panel	02284
Front 1900x570 Carronite Panel	02270
End 900x570 Standard Panel	02294
End 900x570 Carronite Panel	02279

Water Capacity

345 litres

Installation Kit

Standard - AK-03

Carronite - AK-03-C

Whirlpool Compatibility

Clenda Systems 1, 2, 3, 4, 5, 6

Carron Bathrooms Limited
North Carron Works
Stenhouse Road
Falkirk, FK2 8UW

Email : info@carronbathrooms.com
Web : www.carronbathrooms.com

carron
THE NAME FOR BATHS