Frontals supplied loose & to be fitted as per customer specification.

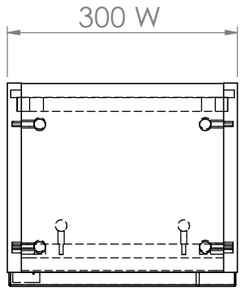

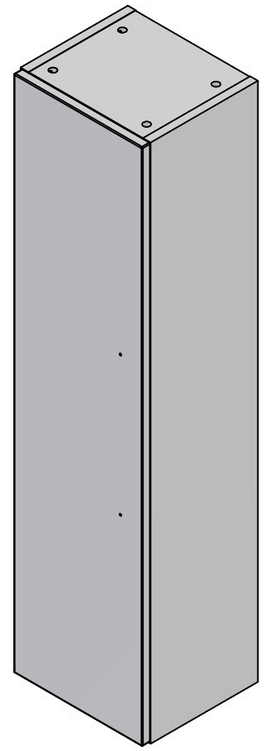

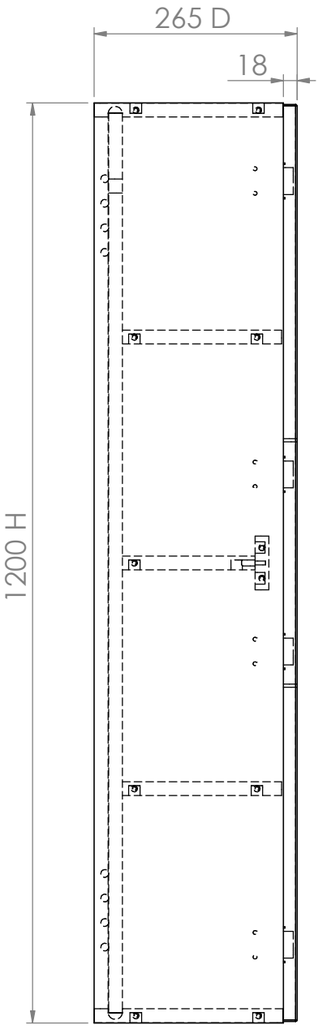

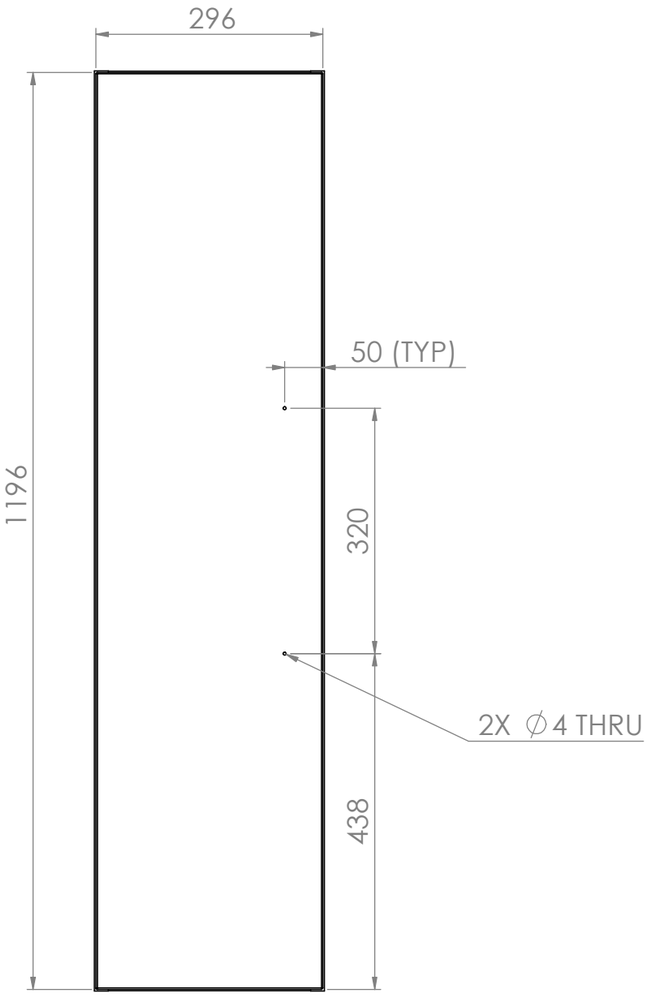

Summerbridge

This drawing belongs to HUMBER DOORS LTD and is not allowed to be copied, partly copied, reproduced or assigned without written approval from HUMBER DOORS LTD.

REV:	CHANGE DESCRIPTION:	REF:	DATE:	BY:
1	First Issue	N/A	17/02/2026	JA

DRAWN BY: D.Burge — DATE: 05/02/2026 — REVISION: 1

APPROVED BY: J.Allen — DATE: 17/02/2026

TITLE:

Dove - 300mm Tallboy Unit

DWG NO.

KAR-DOV04

DIMENSIONS:

300W x 265D x 1200H

UNLESS OTHERWISE SPECIFIED:
DIMENSIONS ARE IN MILLIMETERS
TOLERANCES:
LINEAR: +/- 0.5mm
ANGULAR: +/- 0.5°

DO NOT SCALE — IF IN DOUBT ASK

A3

SCALE:1:8

SHEET 1 OF 1