MIRROR ABOUT CENTRELINE

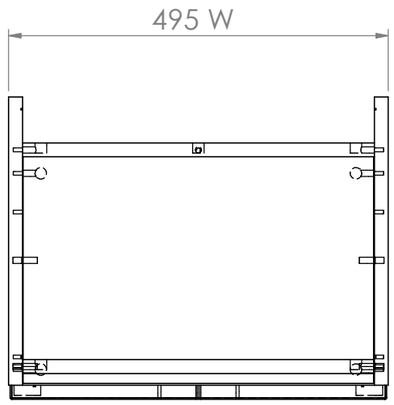

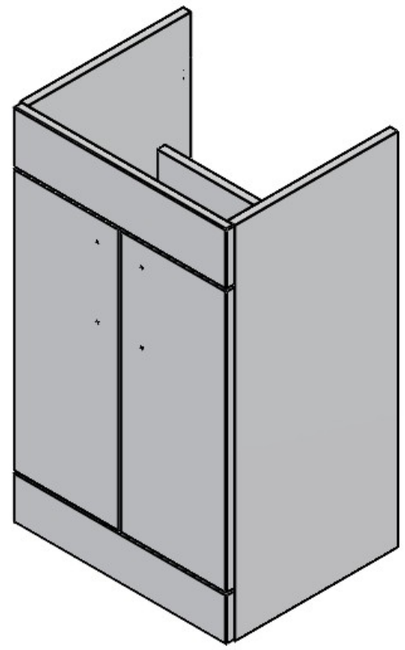

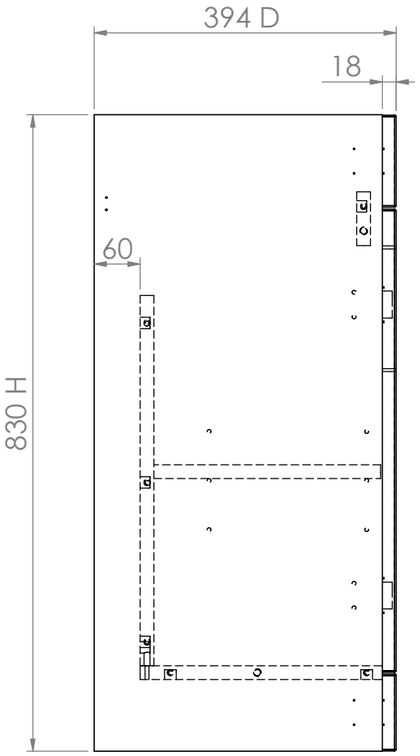

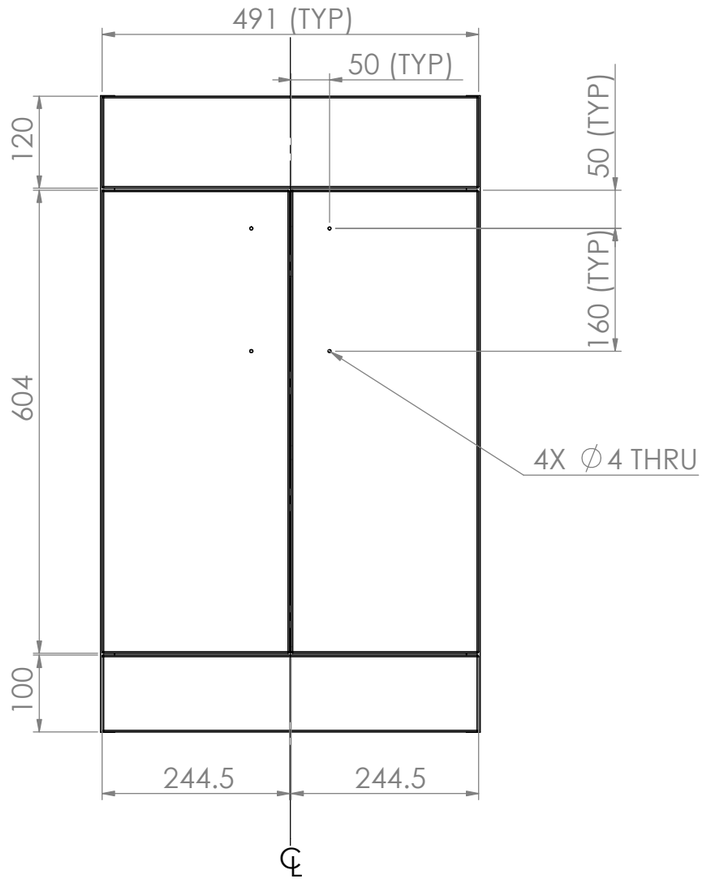

Summerbridge

This drawing belongs to HUMBER DOORS LTD and is not allowed to be copied, partly copied, reproduced or assigned without written approval from HUMBER DOORS LTD.

REV:	CHANGE DESCRIPTION:	REF:	DATE:	BY:
1	First Issue	N/A	17/02/2026	JA

DRAWN BY: D.Burge — DATE: 16/02/2026 — REVISION: 1

APPROVED BY: J.Allen — DATE: 17/02/2026

TITLE:

Dove - 500mm 2 Door Floor Standing Unit

DWG NO.

KAR-DOV02

DIMENSIONS:

495W x 394D x 830H

UNLESS OTHERWISE SPECIFIED:
DIMENSIONS ARE IN MILLIMETERS
TOLERANCES:
LINEAR: +/- 0.5mm
ANGULAR: +/- 0.5°

DO NOT SCALE — IF IN DOUBT ASK

A3

SCALE:1:8

SHEET 1 OF 1