Imperial

1800 x 750









Bath Codes

Imperial 1800x750 Standard	02116
Imperial 1800x750 Carronite	02117

Screen Codes

CFS1 Curved Profile	02344
CFS1 Square Profile	02346

Panel Codes

Front 1800x540 Standard Panel	02322
Front 1800x540 Carronite Panel	02323
End 750x540 Standard Panel	02289
End 750x540 Carronite Panel	02275

Technical Information

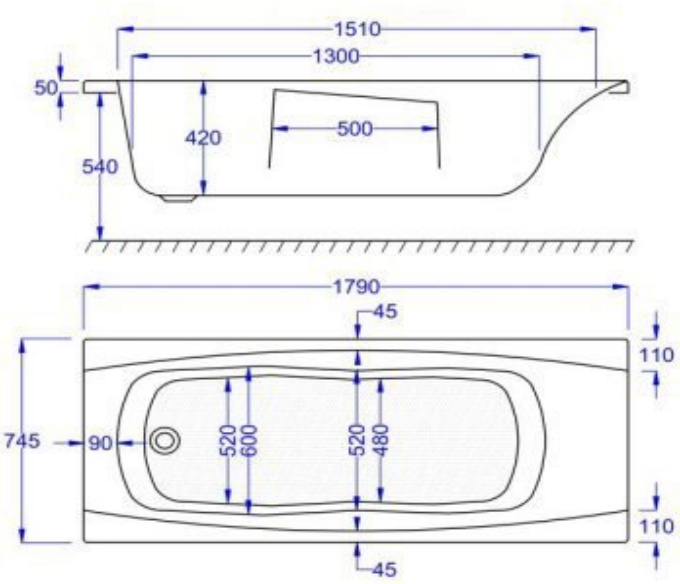

Water Capacity

210 litres

Installation Kit

Standard - AK-01

Carronite - AK-01-C

Whirlpool Compatibility

Clenda Systems 1, 2, 3, 4, 5, 6

Carron Bathrooms Limited

North Carron Works
Stenhouse Road
Falkirk, FK2 8UW

Email : info@carronbathrooms.com
Web : www.carronbathrooms.com
Tel : +44 (0)1324 638 407

carron
THE NAME FOR BATHS