Infinity

Infinity Cube Unit
INF410CUBE



- **Comes assembled to save time on installation**
- **Soft-close hinges**
- **Gloss White**

Technical drawing

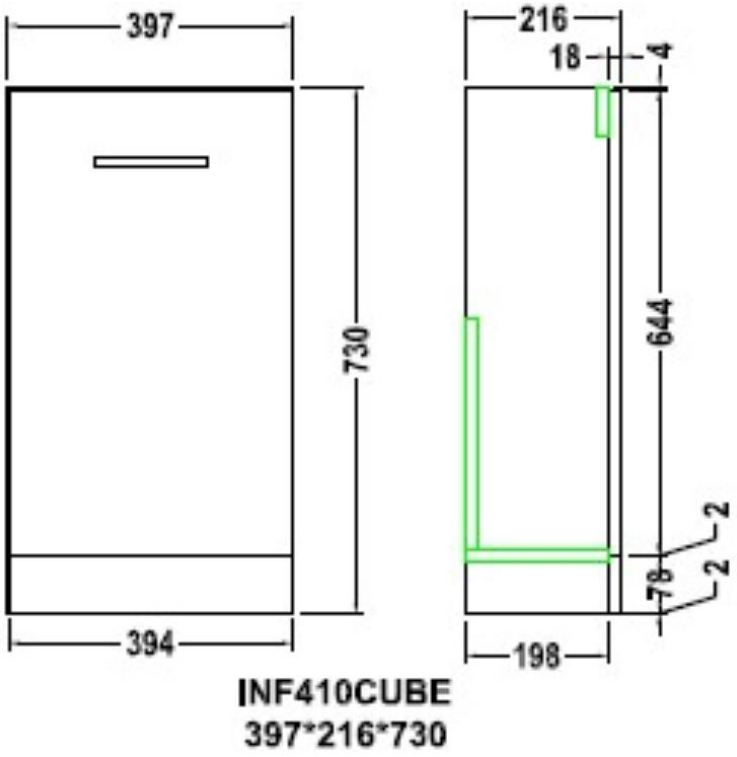

INF410CUBE
397*216*730