HELIX ROUND

1700 x 700





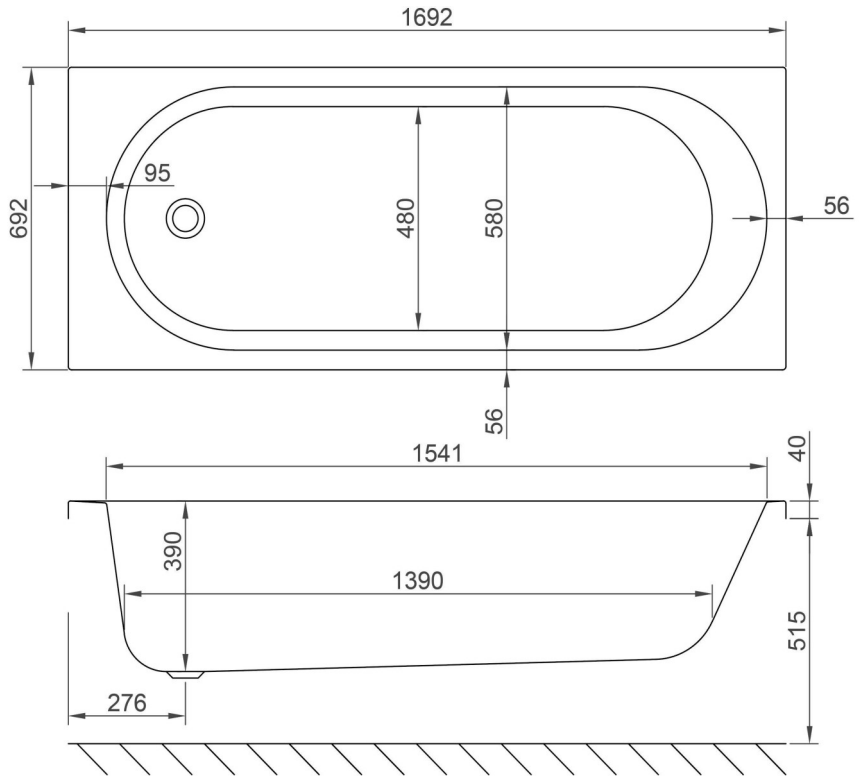

Water Capacity—185 litres