Haiku

1800 x 900





Technical Information

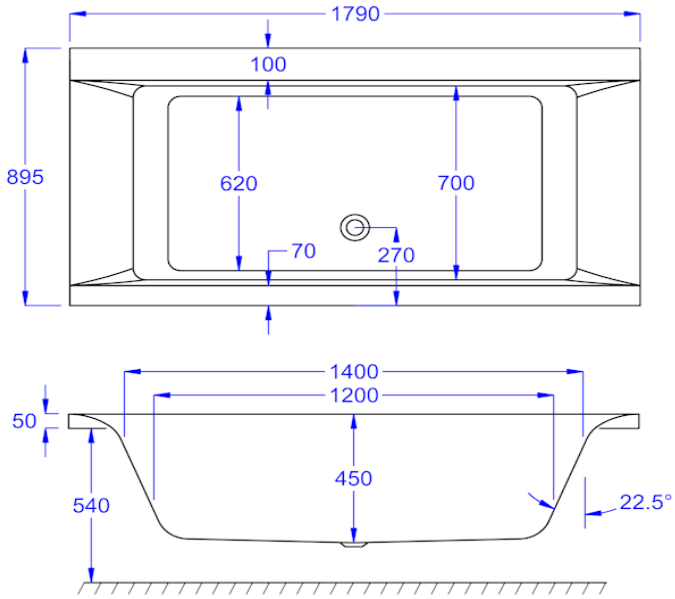

Bath Codes

Haiku Standard	02098
Haiku Carronite	02099

Panel Codes

Front 1800x540 Standard Panel	02565
Front 1800x540 Carronite Panel	02566
End 900x540 Standard Panel	02293
End 900x540 Carronite Panel	02278

Water Capacity

290 litres

Installation Kit

Standard - AK-03
Carronite - AK-03-C

Whirlpool Compatibility

Clenda Systems 1, 2, 3, 4, 5, 6

Carron Bathrooms Limited
North Carron Works
Stenhouse Road
Falkirk, FK2 8UW

Email : info@carronbathrooms.com
Web : www.carronbathrooms.com
Tel : +44 (0)1324 638 407

carron
THE NAME FOR BATHS