Haiku

1800 x 800





Technical Information

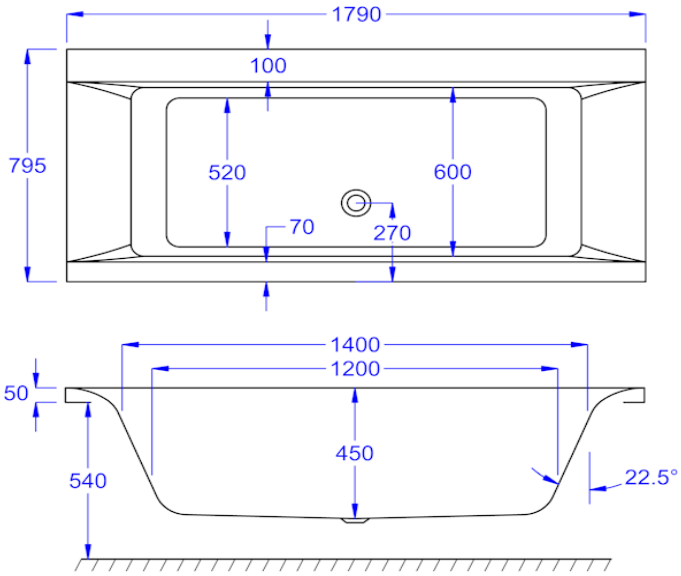

Bath Codes

Haiku Standard	02096
Haiku Carronite	02097

Panel Codes

L-Shaped Panel	02301
Front 1700x540 Standard Panel	02565
Front 1700x540 Carronite Panel	02566
End 800x540 Standard Panel	02291
End 800x540 Carronite Panel	02277

Water Capacity

230 litres

Installation Kit

Standard - AK-03
Carronite - AK-03-C

Whirlpool Compatibility

Clenda Systems 1, 2, 3, 4, 5, 6

Carron Bathrooms Limited
North Carron Works
Stenhouse Road
Falkirk, FK2 8UW

Email : info@carronbathrooms.com
Web : www.carronbathrooms.com
Tel : +44 (0)1324 638 407

carron
THE NAME FOR BATHS