Equity

1700 x 750





Technical Information

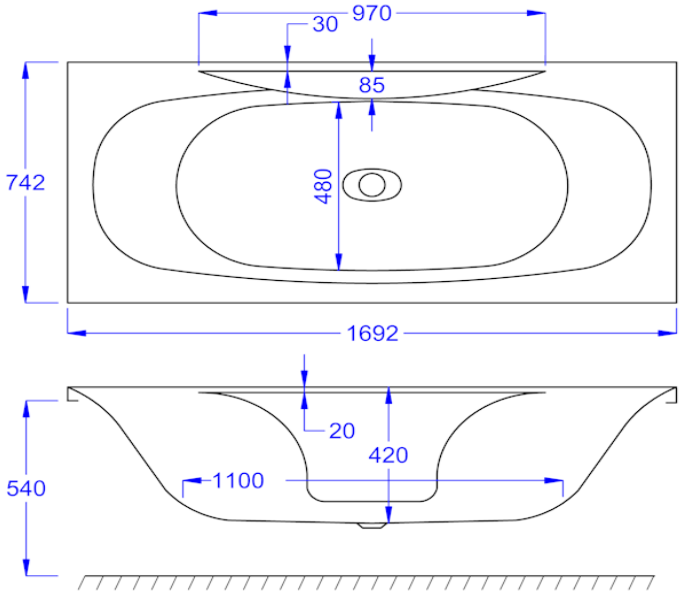

Bath Codes

Equity Standard	02359
Equity Carronite	02360

Panel Codes

L-Shaped Panel	02300
Front 1700x540 Standard Panel	02318
Front 1700x540 Carronite Panel	02319
End 750x540 Standard Panel	02289
End 750x540 Carronite Panel	02275

Water Capacity

204 litres

Installation Kit

Standard - AK-01
Carronite - AK-01-C

Whirlpool Compatibility

Clenda Systems 1, 2, 3, 4, 5, 6

Carron Bathrooms Limited
North Carron Works
Stenhouse Road
Falkirk, FK2 8UW

Email : info@carronbathrooms.com
Web : www.carronbathrooms.com
Tel : +44 (0)1324 638 407

carron
THE NAME FOR BATHS