Equation

1800 x 800





Technical Information

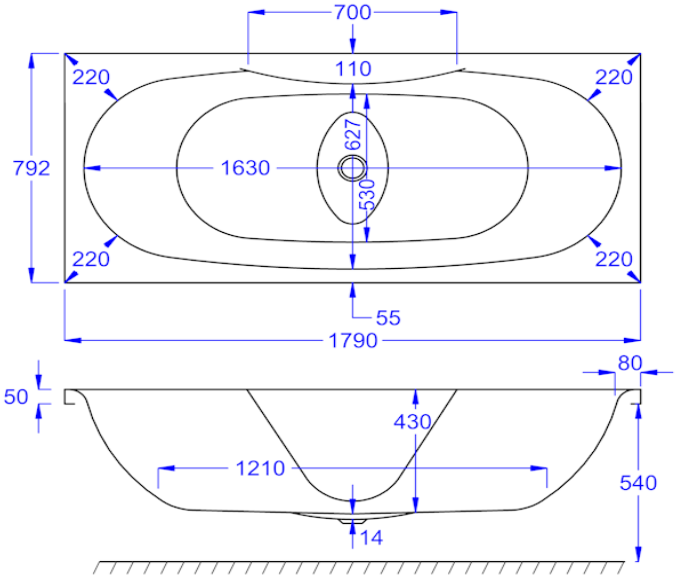

Bath Codes

Equation Standard	02092
Equation Carronite	02093

Panel Codes

L-Shaped Panel	02301
Front 1800x540 Standard Panel	02322
Front 1800x540 Carronite Panel	02323
End 800x540 Standard Panel	02291
End 800x540 Carronite Panel	02277

Water Capacity

233 litres

Installation Kit

Standard - AK-03

Carronite - AK-03-C

Whirlpool Compatibility

Clenda Systems 1, 2, 3, 4, 5, 6

Carron Bathrooms Limited

North Carron Works
Stenhouse Road
Falkirk, FK2 8UW

Email : info@carronbathrooms.com
Web : www.carronbathrooms.com
Tel : +44 (0)1324 638 407

carron
THE NAME FOR BATHS