CFS-2

Shower Screen

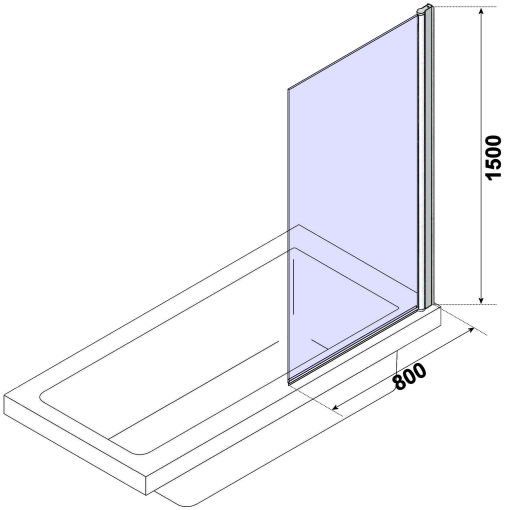

Glass Thickness	-	**6mm**
Screen & Packing Weight	-	**21kgs**
Screen Weight	-	**19kgs**
Packing Dimensions	-	**860 x 1540 x 50**