PRODUCT SPECIFICATION

Astley – 750mm Bath End Panel



ILLUSTRATION: Astley 750 mm Bath end panel

CODE: FUR513AS

Material: Vinyl wrapped MDF

Colour: White

Notes: Made in UK

Technical Drawing

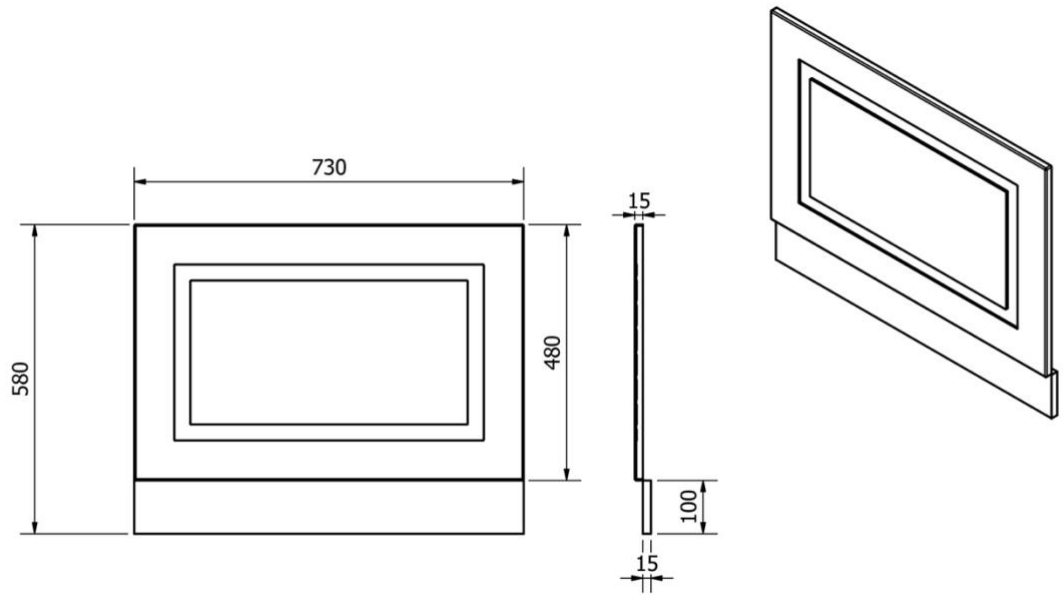

*we reserve the right to make technical modifications and alter colours without prior notice