PRODUCT SPECIFICATION

Astley – 800mm Bath End Panel



ILLUSTRATION: Astley 800 mm Bath end panel

CODE: FUR534AS

Material: Vinyl wrapped MDF

Colour: Grey

Notes: Made in UK

Technical Drawing

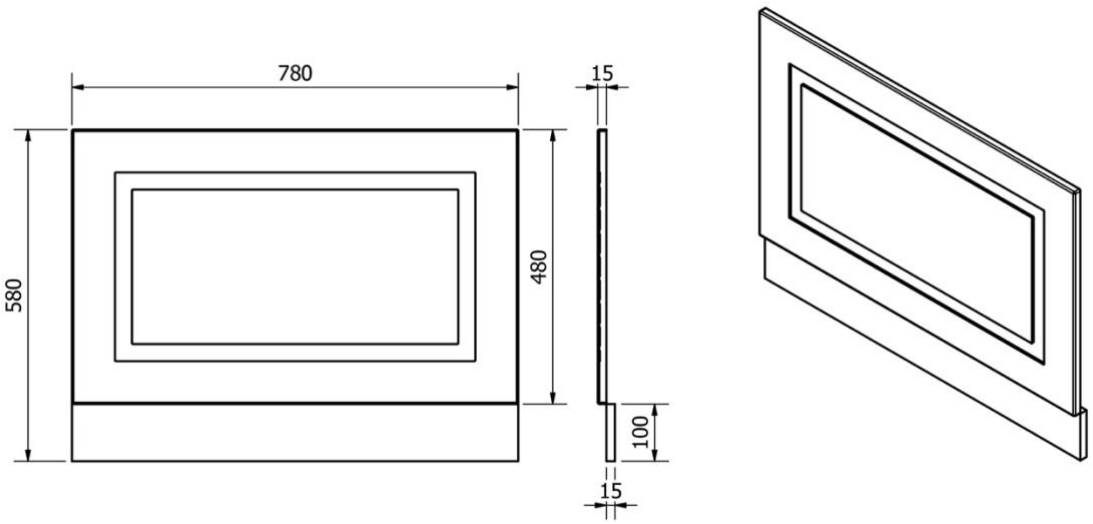

*we reserve the right to make technical modifications and alter colours without prior notice