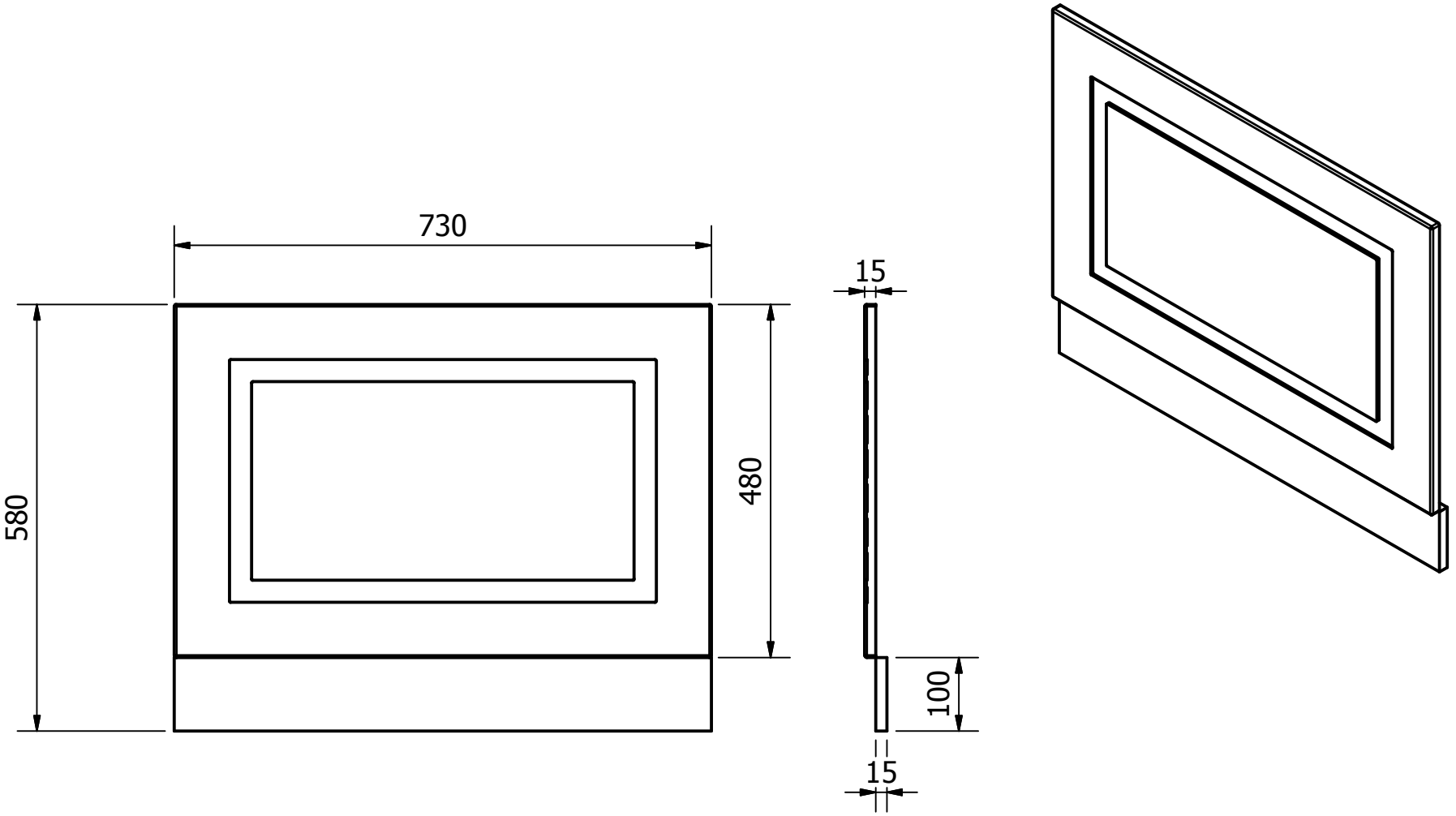

INPRESS HAMMONDS FURNITURE LTD NUTTS LANE HINCKLEY LEICESTERSHIRE LE10 3QQ TEL: 0870 241 7177 FAX: 0870 241 71768 INFO@HAMMONDS-INPRESS.CO.UK	ALL DIMENSIONS IN MM	ALL DIMENSIONS SHOWN ARE FINISHED SIZES INCLUDING FOIL GENERAL LIMIT + - 0.5MM UNLESS OTHERWISE STATED	CUSTOMER APPROVED	DO NOT SCALE	ISS
	DRAWN BY J.THOMAS	PART DESCRIPTION		PART NO.	
	CUSTOMER KARTELL UK	750mm BATH END PANEL	FOIL	DATE	10/01/2018
			BOARD	Inpress Part of the Hammonds Group	

THIS DRAWING IS COPYRIGHT AND MUST NOT BE REPRODUCED WITHOUT THE CONSENT OF HAMMONDS FURNITURE LTD