Apex

1700 x 800









Technical Information

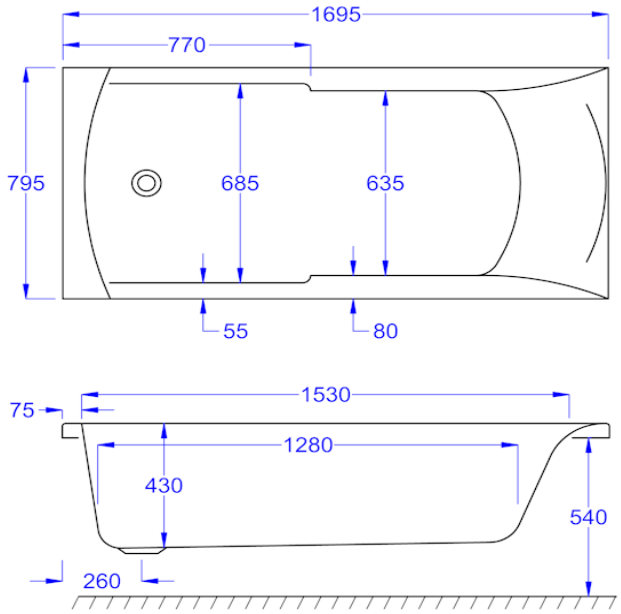

Water Capacity
210 litres

Installation Kit
Standard - AK-03
Carronite - AK-03-C

Whirlpool Compatibility
N/A

Bath Codes		Panel Codes	
Apex 1700x800 Standard	02011	L-Shape 1700x800x540 Panel	02489
Apex 1700x800 Carronite	02012	Front 1700x540 Standard Panel	02318
Screen Codes		Front 1700x540 Carronite Panel	02319
CFS1 Curved Profile	02344	End 800x540 Standard Panel	02291
CFS1 Square Profile	02346	End 800x540 Carronite Panel	02277

Carron Bathrooms Limited
North Carron Works
Stenhouse Road
Falkirk, FK2 8UW

Email : info@carronbathrooms.com
Web : www.carronbathrooms.com

carron
THE NAME FOR BATHS