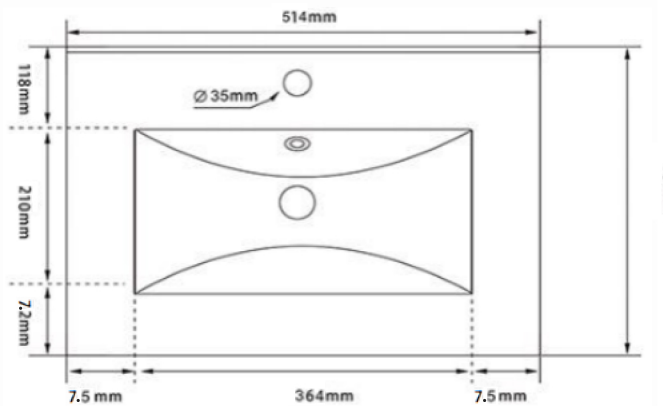
514mm
118mm
Ø 35mm
210mm
7.2mm
405mm
7.5 mm
364mm
7.5 mm

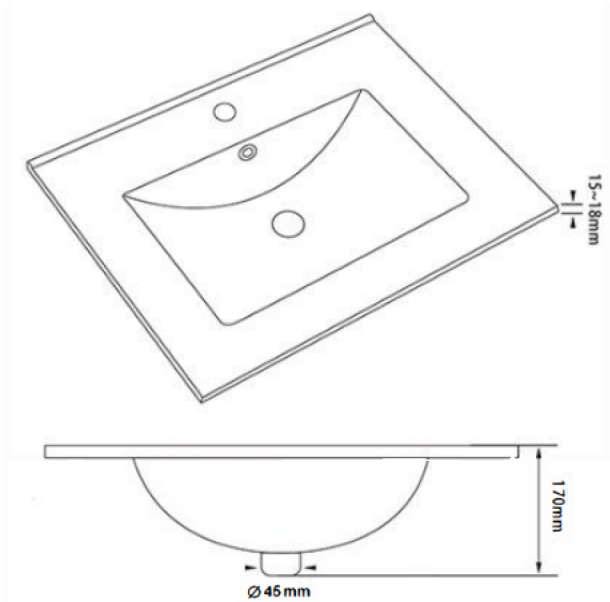
15~18mm
170mm
Ø 45 mm