

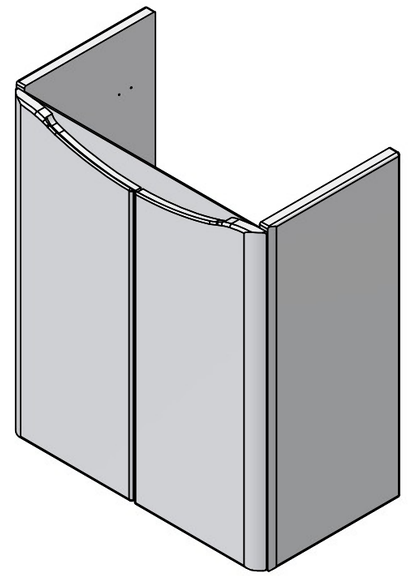

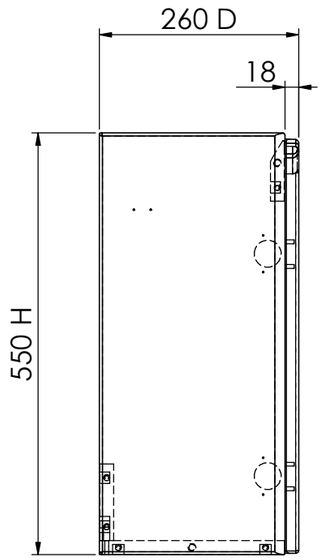

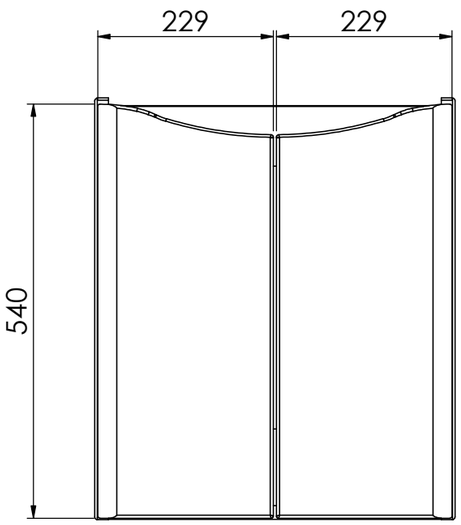

FLUIDITÀ

This drawing belongs to HUMBER DOORS LTD and is not allowed to be copied, partly copied, reproduced or assigned without written approval from HUMBER DOORS LTD.

REV:	CHANGE DESCRIPTION:	REF:	DATE:	BY:
1	First Issue	N/A	23/02/2026	JA

DRAWN BY: D.Burge	DATE: 23/02/2026	REVISION: 1
APPROVED BY: J.Allen	DATE: 23/02/2026	

TITLE:

Arc - 500mm 2 Door Wall Mounted Cloak Unit

DWG NO.

ARCLOAKWM

DIMENSIONS:

470W X 260D X 550H

UNLESS OTHERWISE SPECIFIED: DIMENSIONS ARE IN MILLIMETERS TOLERANCES: LINEAR: +/- 0.5mm ANGULAR: +/- 0.5°	DO NOT SCALE IF IN DOUBT ASK	A3
SCALE:1:8	SHEET 1 OF 1	