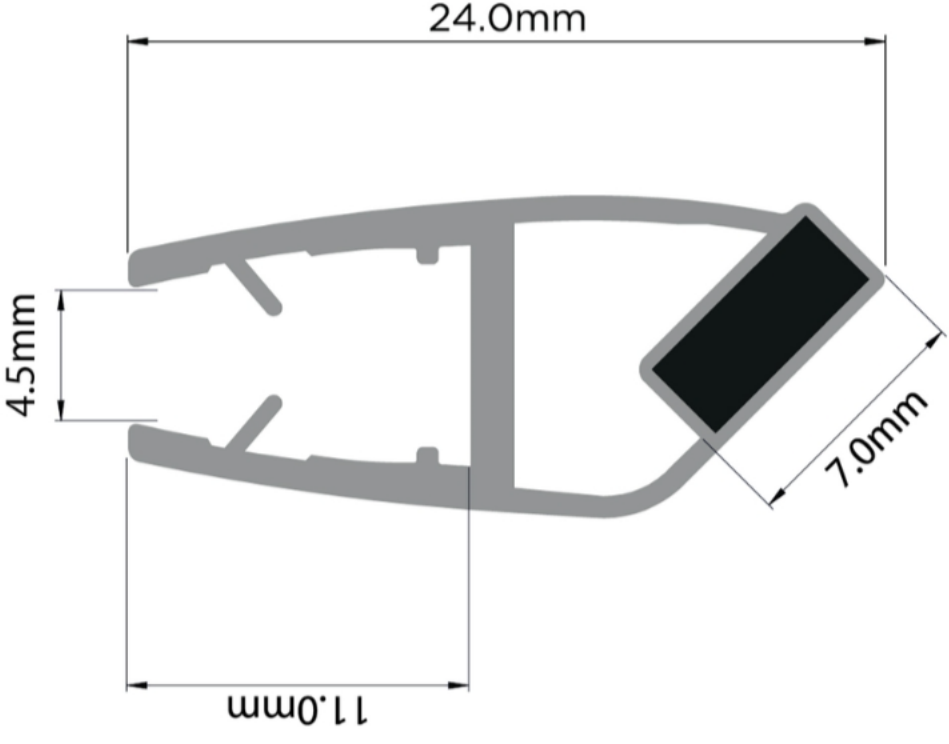
24.0mm
4.5mm
7.0mm
11.0mm